Brushless

Demension

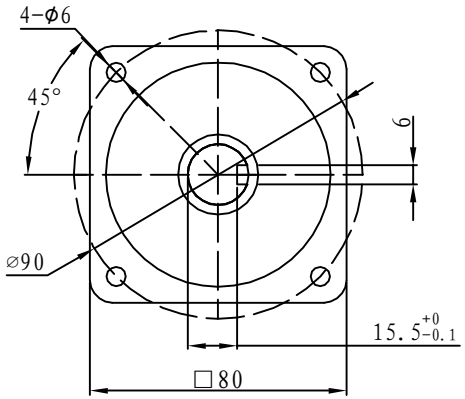

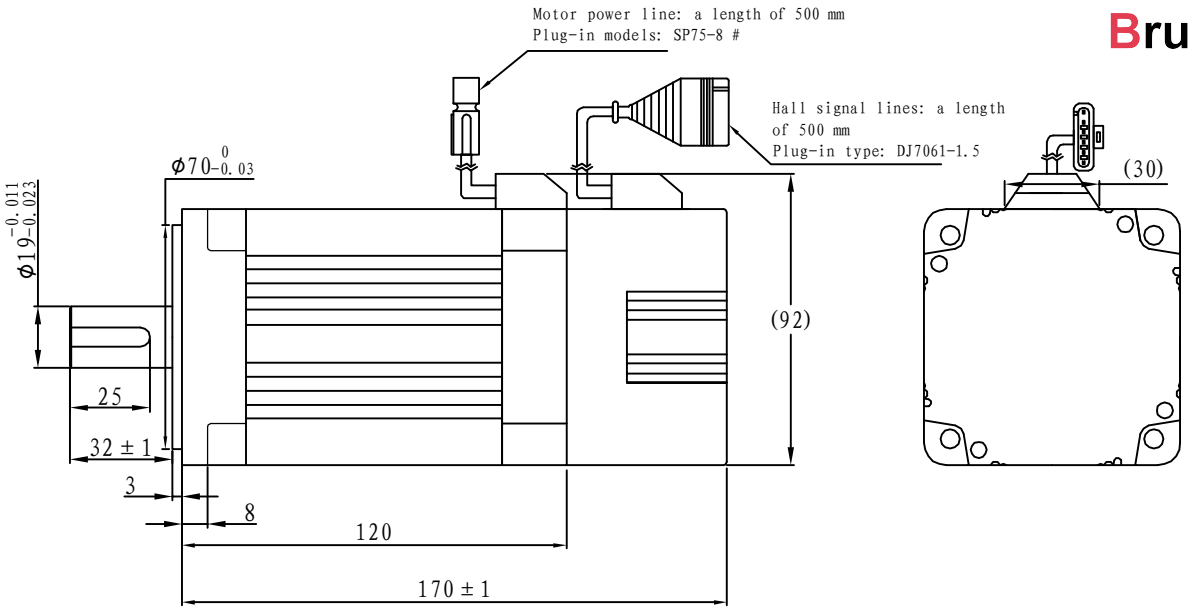

Motor to Hall Relationship

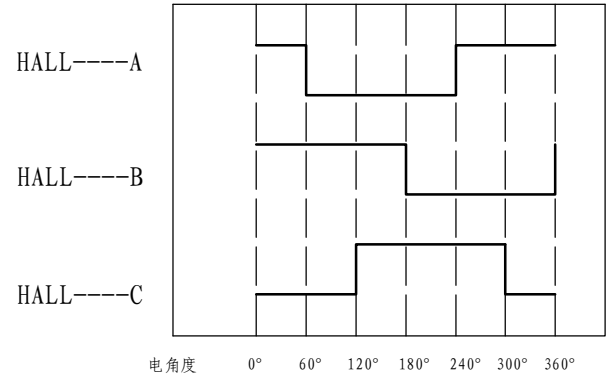

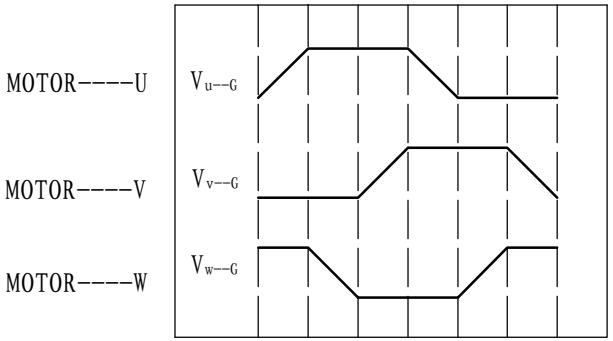

PHASE TO GROUND VOLTAGE
ROTATION CW FROM THE FLANGE

Line Define

Power Wire

Red	Motor U
Yellow	Motor V
Blue	Motor W

Feedback Wire

Hall line colour	Hall signal definition	Plug serial number
Orange and black	5V	1
Orange	0V	2
Yellow	Hall A	3
Blue	Hall B	4
Green	Hall C	5

Tecnichal Data

Type	80WD-M02420-24V
Power (KW)	0.50
Rated voltage (V)	24
Rated current （A）	26.18
Rated speed (rpm)	2000
Rated torque （NM）	2.4
Rotor inertia （Kgcm2)	0.8
Protection rank	IP54
Insulation rank	F
Appropriate environment	Temperature: 0～50℃ Humidity: ＜90% (No dewdrop)
Motor weight （KG）	3