# 500W 48V 2000r/min Brushless DC motor

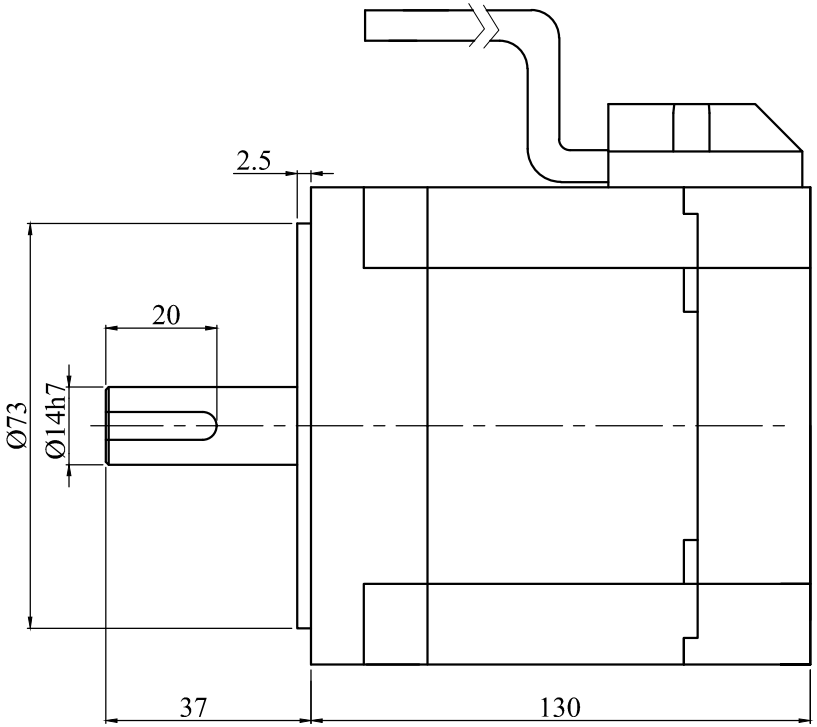


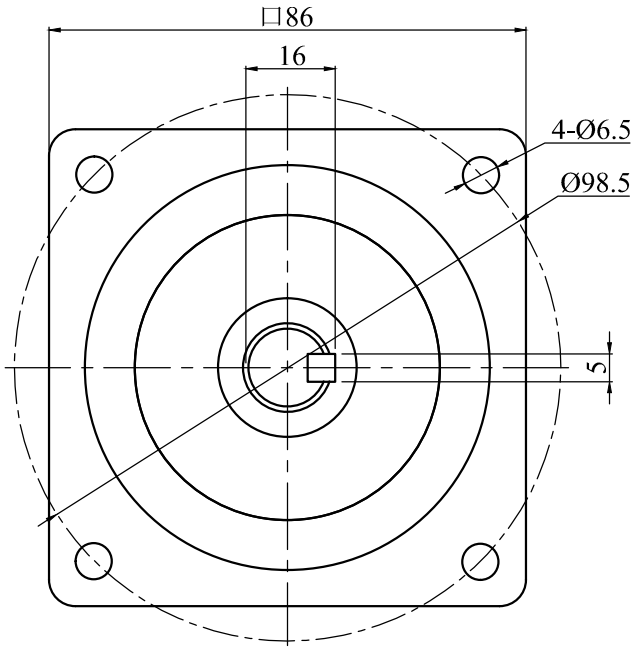


Specification:
Style: D5BLD500-48A
Voltage: 48V
Rated Power: 500W
Rated Current: 13A
Rated Speed: 2000r/min
Rated Torque: 2.4N.m
Protection Rank: IP54
Environment Temperature : 0-50℃
Environment Humidity: < 90%

| Power wire | | | Hall wire | | | | |
|---|---|---|---|---|---|---|---|
| Red | Yellow | Black | Red | Black | Blue | Green | White |
| U | V | W | 5V | GND | Hu | Hv | Hw |

**Brushless**

| NO | | | | |
|---|---|---|---|---|
| | | | | |
| | | | | |
| | | | | |
| | | | | |

SIZE A4